SPARTAN

SUNWARD

SWE90UF MINI-EXCAVATOR

DESIGN AWARD 2022

◆ Total weight:8.75\8.9t ◆ Engine power:46.2kW/2200rpm ◆ Bucket capacity:0.26m³

- It is a multi-functional tail-less construction equipment with excellent appearance and flexible deflection and tail-less construction performance, improving construction efficiency in small spaces.
- The new comfortable cabin is upgraded with intelligent control devices, one-key start function, and 7-inch touch screen, and the equipment information could be known at any time.
- Electric proportional handle is provided to control auxiliary tools more accurately. The flow of auxiliary tools could be adjusted for more applications with better coordinated operations.
- The covered parts could be opened widely and the platform edges could be removed to facilitate internal inspection and maintenance.
- The structural parts are stable and reliable. The driving cabin has passed TOPS and ROPS certification. Moving arms and rod oil cylinder are equipped with explosion-proof valves to ensure the durability of the whole machine.

SWE90UF 61.7HP

SPARTAN

Parameters and performance of the main machine			
Dimension (L×W×H)		mm	6494x2270x2735
Overall weight	With rubber track	t	8.75
	With steel track	t	8.9
Standard bucket capacity		m^3	0.26
Bucket digging ability		kN	63.5
Digging force of arm		kN	38
Max. traction		kN	68
Deflection angle (boom)		°	52°(Right)63°(Left)
Travel speed (Max/Min)		km/h	4.7/2.7
Gradeability		°	35
Ground pressure		kPa	35.4
Slewing speed		rpm	11.2
Engine	Brand		YANMAR
	Model		4TNV98C-SSU(Euro V)
	Type		4-cylinder, 4-stroke, water cooling
	Displacement	L	3.319
	Power/Rotation speed	kw/rpm	46.2/2200
Fuel tank capacity		L	120
Primary pump	Type		1 variable piston pump
	Flow rate	L/min	160
Pressure of main relief valve		MPa	29
Hydraulic oil tank capacity		L	80

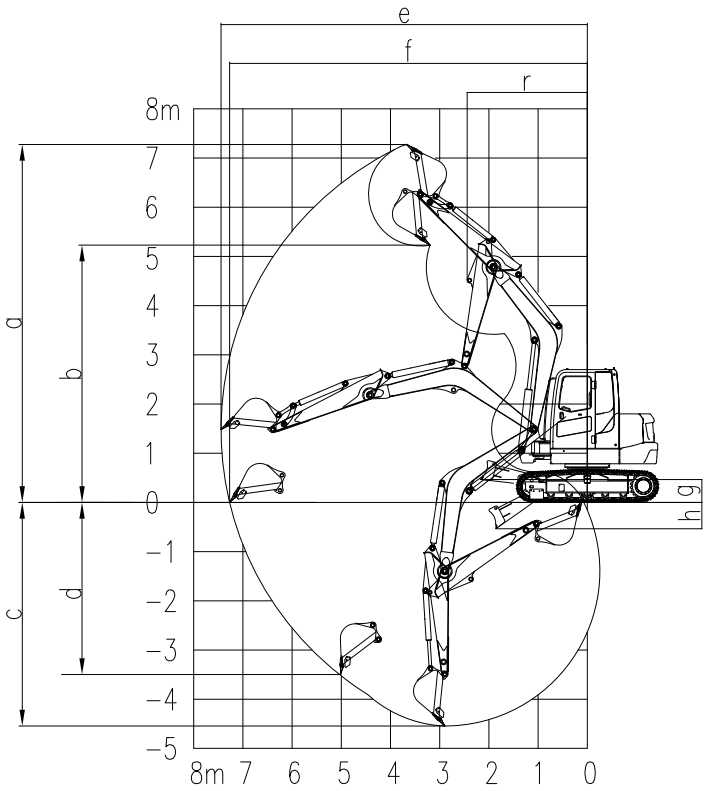

Working range			
	Arm length	mm	2100
a	Max. digging height	mm	7290
b	Max. dumping height	mm	5245
c	Max. digging depth	mm	4545
d	Max. vertical digging depth	mm	3485
e	Max. digging radius	mm	7445
f	Max. digging reach at ground level	mm	7270
g	Max. lift height of the dozer blade	mm	450
h	Max. digging depth of the dozer blade	mm	485
r	Min. swing radius	mm	2765
	Bulldozer blade length×width	mm	2260x450

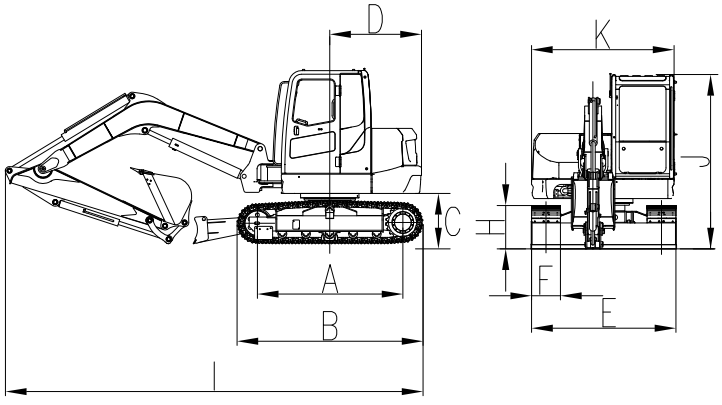

Outline dimension							
A	Wheel tread	mm	2270	G	Chassis ground clearance	mm	400
B	Total track length	mm	2900	H	Track height	mm	678
C	Ground clearance of platform	mm	800	I	Total length	mm	6494
D	Platform tail slewing radius	mm	1430	J	Cab roof height	mm	2735
E	Chassis width	mm	2250	K	Upper-structure width	mm	2220
F	Track width	mm	450				

★The above parameters may be different due to product upgrading.

Spartan Machinery Australia

1300 440 693 https://spartanmachinery.com.au/ sales@spartanmachinery.com.au
803 Beaudesert Rd, Archerfield, QLD 4108 118 Main Rd, Clayton South, VIC 3169