SPARTAN

SUNWARD

SWE08F MINI-EXCAVATOR

◆ Total weight:1.01t ◆ Engine power:7.2kW/2400rpm ◆ Bucket capacity:0.022m^3

- Equipped with high-performance engine, meeting Euro 5 emission standard, and low noise and shaking.
- Equipped with famous brand hydraulic components that are reliable and durable. Pilot hydraulic maneuvering is used for precise and smooth operation.
- Tail cover with large opening angle and front sealing plate that can be fully opened to facilitate easy day-to-day maintenance.
- With the chassis expansion and contraction, moving arm deflection, upper trolley rotation, bulldozer folding and other functions, it can be used for the works in narrow spaces.
- Various manipulator handles are centrally arranged for flexible switching of functions, and flip armrest box and pilot safety switch are installed for safe and comfortable operation.

SWE08F 9.7HP

Parameters and performance of the main machine			
Dimension (L×W×H)		mm	2640x750x2276
Overall weight	With rubber track	t	1.01
	With steel track	t	\
Standard bucket capacity		m^3	0.022
Bucket digging ability		kN	9.4
Digging force of arm		kN	5.8
Max. traction		kN	9.4
Deflection angle (boom)		°	53°(Right)73°(Left)
Travel speed (Max/Min)		km/h	2.9/1.5
Gradeability		°	30
Ground pressure		kPa	24.5
Slewing speed		rpm	8.2
Engine	Brand		YANMAR
	Model		2TNV70-PSU(Euro V)
	Type		4-stroke, in line, water cooling
	Displacement	L	0.57
	Power/Rotation speed	kw/rpm	7.2/2400
Fuel tank capacity		L	10
Primary pump	Type		3 coupling gear pump
	Flow rate	L/min	9.6+9.6
Pressure of main relief valve		MPa	16
Hydraulic oil tank capacity		L	9.5

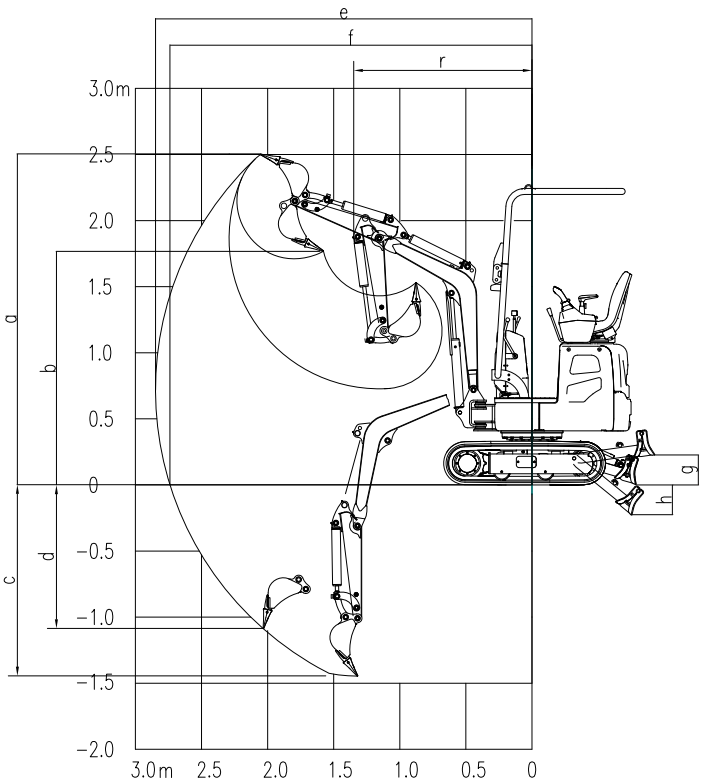

Working range			
	Arm length	mm	700
a	Max. digging height	mm	2503
b	Max. dumping height	mm	1768
c	Max. digging depth	mm	1446
d	Max. vertical digging depth	mm	1084
e	Max. digging radius	mm	2848
f	Max. digging reach at ground level	mm	2738
g	Max. lift height of the dozer blade	mm	225
h	Max. digging depth of the dozer blade	mm	225
r	Min. swing radius	mm	1349
	Bulldozer blade length×width	mm	1000x197

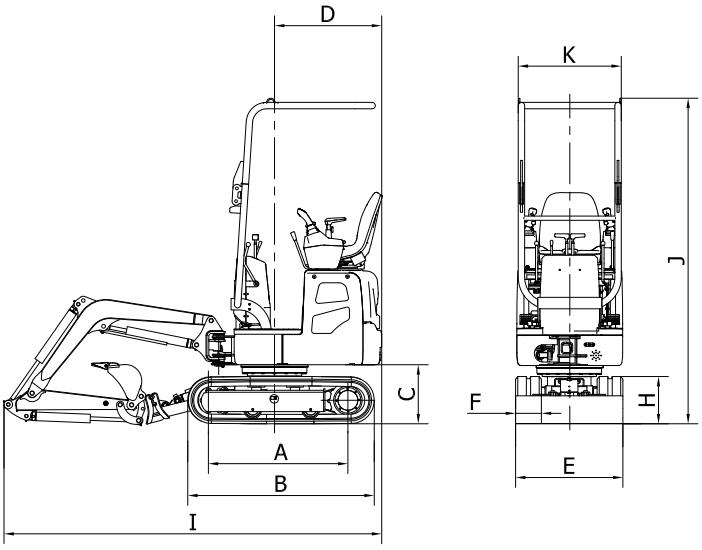

Outline dimension							
A	Wheel tread	mm	975	G	Chassis ground clearance	mm	131
B	Total track length	mm	1299	H	Track height	mm	330
C	Ground clearance of platform	mm	419	I	Total length	mm	2640
D	Platform tail slewing radius	mm	750	J	Cab roof height	mm	2276
E	Chassis width	mm	750/1000	K	Upper-structure width	mm	740
F	Track width	mm	180				

★The above parameters may be different due to product upgrading.

Spartan Machinery Australia

sales@spartanmachinery.com.au 1300 440 693 https://spartanmachinery.com.au/
803 Beaudesert Rd, Archerfield, QLD 4108 118 Main Rd, Clayton South, VIC 3169