SPARTAN

SUNWARD

Standard Functions

roportional control	Unidirectional extension platform	Folding fence	Platform self-locking door
Airless tires without imprint	Timer	Standard transport forklift holes	Safe maintenance support rods
Horn	Flash lamp	Motion buzzer	DC motor driven/Hydraulic pump driven
Pit protector	Emergency descending system	Emergency stop system	Automatic braking system
Tilting protection system	Charging protection system	Fault diagnosis system	

Optional Functions

Air pipe to platform	AC power source connected to platform	GPS tracking system	Overload protection system
Maintenance-free battery	Lithium battery and management system	Intelligent interconnection system	Platform work lights

SWSL1412DC

Dimension

	Maximum working height	14m
A	Maximum platform height	12m
B	Height of retracted platform	1.49m
C	Length of working platform	2.27m
	Extension dimension of platform	0.9m
D	Width of working platform	1.15m
E	Height - retracted (guardrail raised)	2.63m
	Height - retracted (guardrail folded)	2.09m
F	Overall length	2.47m
G	Overall width	1.17m
H	Wheel base	1.87m
I	Ground clearance (retracted state)	0.11m
J	Ground clearance (extended state)	0.02m

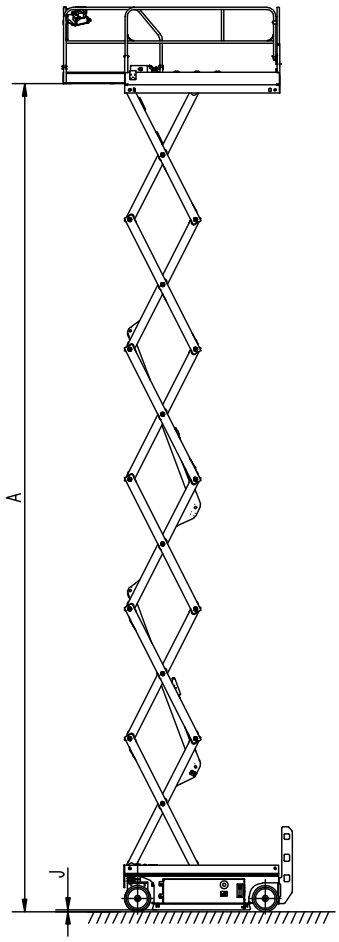

Performance

Rated load	320kg
Safe working load of extended platform	113kg
Maximum number of workers	2
Travel speed (retracted state)	4.0km/h
Travel speed (extended state)	0.8km/h
Turning radius (inside)	0m
Turning radius (outside)	2.2m
Ascending/descending speed	62s / 42s
Maximum gradeability**	25%
Maximum allowed working angle	1.5° / 3°
Control	Proportional control
Drive	DC motor front driven
Multi-disc brake	Two front wheels
Tire - airless without imprint(outer diameterxwidth)	381mm×127mm
Battery	4×12V/300Ah
Charger	24V/30A
Weight	3000kg

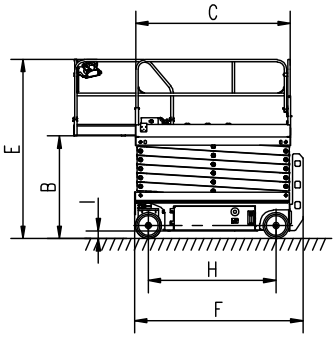

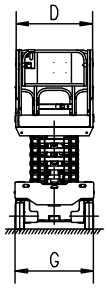

* The working height equals to the platform height plus 2 m.
* The gradeability is adaptive to driving on slopes; refer to the Operation Manual for relevant levels of gradeability.

Spartan Machinery Australia

sales@spartanmachinery.com.au 1300 440 693 https://spartanmachinery.com.au/

803 Beaudesert Rd, Archerfield, QLD, 4108 118 Main Rd, Clayton South, VIC 3169